PILLAR FIRE HYDRANT type NH2

<Two in one = hydrant + isolating pre-valve>

<Double reliability = use even when main valve is defective>

<high flow: K_V = 265 m^3/h>

PROCUREMENT DATA*1

*Name: Above-ground fire hydrant
*Made in accordance with the standard EN14384*2 CE
*Nominal sizes: DN100, PN16
*With isolation "pre-valve" *With control valve,
*Possibility of use even when the main valve seal is broken;
*Activation without additional tools,
*With the blocking of unauthorized activation, or not
*Flow Kv [m3/h]:(for Di=2x65) ⟶ min 260
*Activation moment MOT: max. 50Nm (Class 1)
*Repair of the main valve: the other hydrants remain in operation, without digging up the soil and without dismantling the hydrant body;
*With a defined point of breaking (4.1) due to force F, or not
*Break (4.1): without pipeline damage,
automatic stop of water discharge (with the condition "proper foundation")*3
*Moment of breakage: max 7800 Nm

*Input connection: → Flange EN1092-2 (DN100, PN16) (DN150, PN16) / → Particular request, "describe"
*Nominal height Hi: → (1350) (1550) (1850) mm / → Particular request, "describe"
*Outlet opening Di: → (2x65+1x100) mm / → Particular request, "describe"
*Outlet couplings: → Specify label and standard
*Drainage: → With → D1 / → D2(particular request) / → Without
*Medium:Water → Technical / → Drinking

*Submit documents:
-"Prospect",
-"Test report", issued by the "authorized body",
-Valid "Certificate of Conformity", issued by an "authorized body",
*1 → "Omit/Add" as needed
*2 → **The standard determines min. performance, and recommends the better**

Appearance

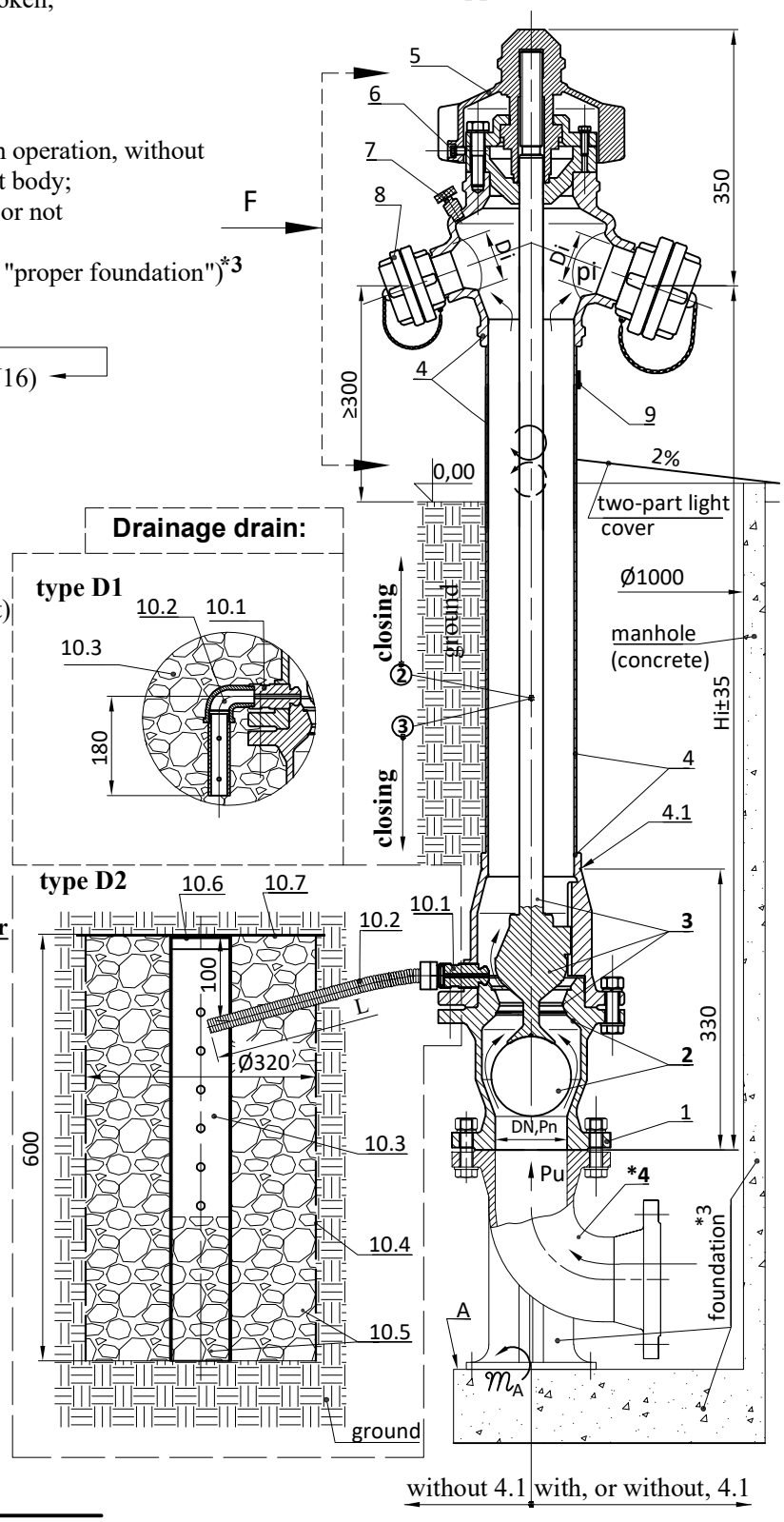

without 4.1 with, or without, 4.1

Appearance

1.Inlet flange 2. Isolation **"pre-valve"**
3. Obturator - **"main valve"**
4. Body 4.1 Place of breakage, due to force F
5. Cap 6.Blocking of unauthorized activation
7. Control valve (safety; sealing)
8. Outlet couplings
9. Identification plate ("CE", "K_V", ...)
10. **Drainage drain:** (not defined by the standard)
type **D1**:
10.1 Drain valve 10.2 Drain pipe
10.3 Stone ⟶ (16÷31)mm*4
type **D2**:
10.1 Drainage valve 10.2 Drain pipe ⟶ (L=?) mm
10.3 Distribution pipe 10.4 Wire basket
10.5 Stone ⟶ (16÷31) mm*4
10.6 Cover 10.7 Plastic foil*4
*4 ⟶ **Provided by the buyer**

TECOOP - ENG D.O.O
INDUSTRIJSKI INŽENJERING
Srbija - 26000 PANČEVO, Savska 12 - 14.
Tel. +381 13 346226 Tel./Fax +381 13 346042
www.tecoop.co.rs / tecoopeng@mts.rs

PILLAR FIRE HYDRANT type NH2
<Two in one = hydrant + isolating pre-valve>
<Double reliability = use even when main valve is defective>
<high flow: K_V = 265 m^3/h>

Basic technical characteristics:

***Safe =** complies with the **requirements of the standard EN 14384 = CE**
***Purpose: Taking water** from underground pipelines **for fire fighting and communal needs**
* **See "Procurement Data" L1/2**
***Flow:Kv=265m³/h, for Di = 2x65**
***moment of activation Mot: max 45Nm, (Class 1)**
***moment of breakage** (at point 4.1) due to force F..... M=7500 Nm
***foundation** .....
***weight**..... ~(85÷92) daN for Hi (1350÷1850) mm
***materials:**
-hydrant body..... nodular cast /stainless steel
-cap, and output couplings..... aluminium
-sealants.....polypropylene/elastomers
-spindle, and obtutator seat..... stainless steel

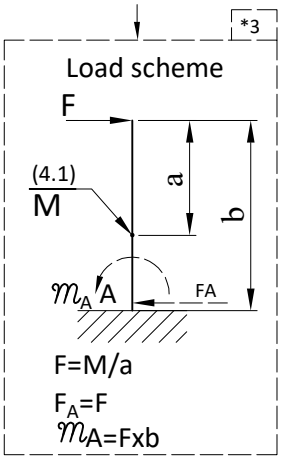

Advantages:

*Isolation **pre-valve** (2) **inside the hydrant**, automatic, self-blocking, **which enables:**
- use of the hydrant and in case the main valve (3) **is broken,**
- that the other hydrants remain in operation even when the main valve seal is replaced
- automatic stop of water leakage, in case of breakage (4.1) due to force F,
- to omit a separate isolation **valve in front of the hydrant,**
- lower cost of construction and maintenance **of the hydrant network.**
***High flow: K_v=265 m^3/h**, for Di = 2x65
***Replacing the main valve seal (3):** without digging up the ground and without disassembling the body, (4)
***The threaded part of the obturator is:** outside the flow of water**, permanently lubricated, maintenance-free** during its entire working life**,**
***Prevented damage to the supply pipeline = breakage at point 4.1,** due to force F,
***Activation without additional tools,** by turning the cap (5) on top of the hydrant,
***Possibility of blocking (6) unauthorized activation**
***The** main valve **seal is conical, self-flushing =** dirt retention prevented **= longer service life of the seal,**
***Easy activation: class 1, MOT < 45 Nm** (max allowed 130 Nm, class 3),
***High closing reliability:** sealing of the closure even after 1000 closures.
***High reliability** of the drainage system **= two outlet openings, and self-flushing drainage valve**
***Great strength of the obturator and the body of the hydrant, MsT> 250 Nm**
***The possibility (7) of easy control of the correctness of closing and draining the hydrant,**
***The amount of residual water** in the hydrant body, < 80 cm^3 (max. allowed 150 cm^3),
***Fast drainage ≤ 5 min** (max. allowed 10 min/m),
***Easy replacement of the seat, main valve (3) and pre-valve (2)**
***Repair of the drainage valve (10.1),** outside, partial excavation**, and without dismantling the hydrant body.(4)**

Documents with the delivery of hydrant:
*Declaration of Performance
*Instruction for safety work (installation, handling, inspection, maintenance, guarantee)

Flow of hydrant:

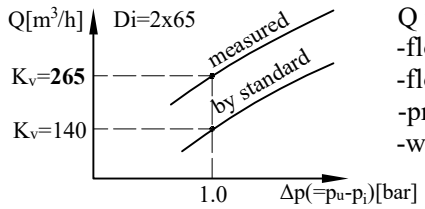

$Q = K_v \times (1000\Delta p / \rho)^{1/2}$
-flow.....Q [m^3/h]
-flow ratio.....K_v [m^3/h]
-pressure difference.....Δp [bar]
-water density..... ρ [kg/m^3]

TECOOP - ENG D.O.O
INDUSTRIJSKI INŽENJERING
Srbija - 26000 PANČEVO, Savska 12 - 14.
Tel. +381 13 346226 Tel./Fax +381 13 346042
www.tecoop.co.rs / tecoopeng@mts.rs